NT™ Integrated Flow Controller, Model 6500

For precision flow control in legacy applications

LIQUID FLOW CONTROLLER

Whether it is automation, process control or safety concerns that require accurate flow control of liquid chemicals and CMP slurry, the instrumentation must be clean, accurate and reliable. Using the latest electronic technology and high-purity materials, Entegris has designed a leading-edge liquid flow controller to allow for greater control of your process flow variables.

- PTFE wetted surfaces for high-purity applications
- Nonmetallic components for corrosion resistance
- Integral pressure transducer for additional process information
- One percent (1%) full scale accuracy for critical dispense applications
- Compact footprint for easy field installs with limited space
- Fast response for accurate dispense rates

CONSTRUCTED FOR COMPATIBILITY

The NT™ Integrated Flow Controller (IFC), model 6500 was developed for use in ultra high-purity liquid chemical instruments and slurry applications.

The instrument's valve seat and diaphragm are designed to minimize dead volume and fluid shear, reducing the possibility of process contamination. Featuring fluoropolymers for wetted parts and inert materials for nonwetted parts, the IFC model 6500 is resistant to harsh chemical environments and external spraydowns.

ADVANCED TECHNOLOGY

The NT IFC, model 6500 utilizes dual PTFE valve diaphragms for fluid containment and contamination protection. Featuring the latest motorized valve and flowmeter technology, encapsulated internal electronics control all aspects of the flow controller. The unit is activated by a setpoint signal (i.e., 4 – 20 mA, 0 – 10 VDC, 0 – 5 VDC) to maintain fluid flow at the desired setpoint.

APPLICATIONS

We are solving today's flow control challenges using the NT IFC, model 6500. Combined with our differential pressure based flowmeter and leading-edge control valve technology, the closed-loop flow controller is ideal for:

- Continuous flow control for critical dispense applications
- CMP slurry dispense to replace existing peristaltic pumps
- Batch control for chemical spiking and blending
- On-demand chemical mixing applications

SPECIFICATIONS

Materials	Wetted parts	Body	PTFE
		Diaphragms	PTFE
		Sensor interface	PFA or CTFE
		Primary O-ring	Perfrez®
	Nonwetted parts	Polypropylene, FEP, PVDF and Viton® (In addition to materials listed above)	
Process temperature	10 – 65°C (50 – 149°F)		
Electrical input	24 VDC (±10%) @ 1 amp		
Electrical output	Two, 4 – 20 mA electrically isolated outputs, one for flow and one for pressure		
Flow measurement	±1% of full scale from 20 – 100% of flow range ±2.5% of full scale from 10 – 20% of flow range (Calibrated using deionized water at 23°C [73°F])		
Repeatability	±0.5% of full scale from 20 – 100% of flow range ±1% of full scale from 10 – 20% of flow range		
Pressure measurement range	0 – 414 kPa (0 – 60 psig)		
Minimum operating pressure (at the inlet)	69 kPa (10 psig)		
Maximum operating pressure	414 kPa (60 psig)		
Over-pressure limit	690 kPa (100 psig)		
Pressure measurement accuracy	±1% of full scale (includes combined effects of linearity, hysteresis, and repeatability)		
Electrical enclosure	IP54		
Reliability	Wetted parts, >3 million cycles		
Response time	<3 seconds from 10 to 95% of full scale flow range		
Setpoint input signal	4 – 20 mA, 0 – 10 VDC, 0 – 5 VDC		
Approvals	CE		

Note: Specifications are subject to change without notice. Please consult the factory for the most current information.

DIMENSIONS

Inlet/outlet port connection	Dimensions		
	A	B	C
¼" Flaretek®	123.4 mm (4.86")	244.1 mm (9.61")	19.6 mm (0.77")
⅜" Flaretek	123.4 mm (4.86")	247.7 mm (9.75")	19.6 mm (0.77")
½" Flaretek	127.0 mm (5.00")	251.7 mm (9.91")	21.6 mm (0.85")
¾" Flaretek	134.9 mm (5.31")	257.8 mm (10.15")	25.7 mm (1.01")

Top View

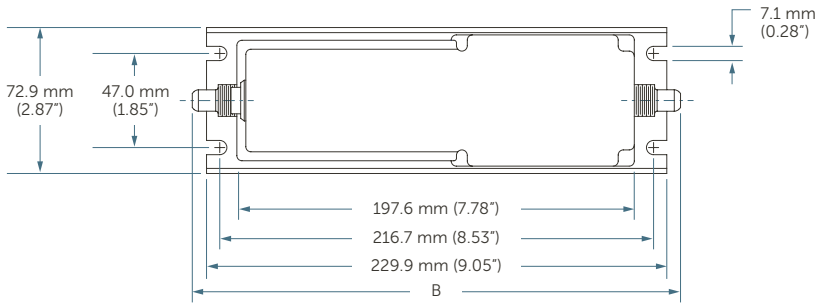

Side View

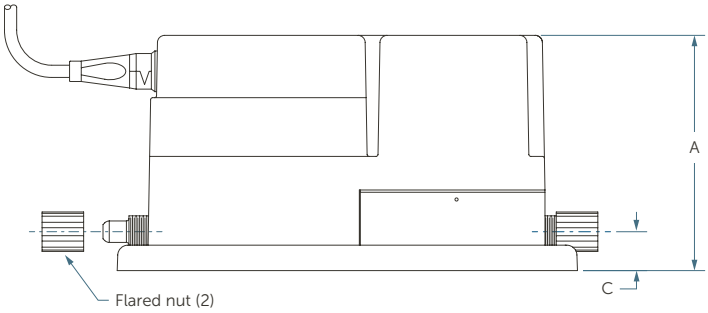

End View

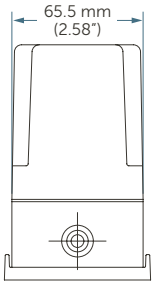

The flow controller is available in the following fitting size and flow range combinations:

Fitting size (fitting code)	T0	T1	T2	T3	T4	T5	T6	T7	T8	T9
¼" (F02)	Yes	Yes	Yes	Yes	Yes	—	—	—	—	—
⅜" (F03)	Yes	Yes	Yes	Yes	Yes	Yes	Yes	—	—	—
½" (F04)	—	—	Yes	Yes	Yes	Yes	Yes	Yes	Yes	—
¾" (F06)	—	—	—	—	—	—	—	Yes	Yes	Yes

ORDERING INFORMATION

NT Integrated Flow Controller, Model 6500: part number

6500–___–____–_____–__–___–U3

Primary/secondary seal
U3 = Perfrez PXC Ultra/Viton

Sensor interface
P7 = CTFE (for acid, bases and oxidants, typically)
P8 = PFA (for solvents and temperatures >40°C [104°F], typically)*

Setpoint input signal, controller type
A = 4–20 mA, continuous
B = 0–10 VDC, continuous
K = 4–20 mA, batch
L = 0–10 VDC, batch
M = 0–5 VDC, batch

Electrical connector type
B12 = FEP-jacketed 12' pigtail electrical cable
D00 = Polypropylene connector (cable not included)
D12 = Polypropylene connector and 12' PVC cable
D30 = Polypropylene connector and 30' PVC cable

Inlet/outlet port connection
F02 = ¼" Flaretek tube fitting
F03 = ⅜" Flaretek tube fitting
F04 = ½" Flaretek tube fitting
F06 = ¾" Flaretek tube fitting

Flow range**

T0 = 0–50 mL/min	T5 = 0–2.5 L/min
T1 = 0–125 mL/min	T6 = 0–5 L/min
T2 = 0–250 mL/min	T7 = 0–10 L/min
T3 = 0–500 mL/min	T8 = 0–20 L/min
T4 = 0–1250 mL/min	T9 = 0–40 L/min

** Selection is dependent on application and chemical media. Please contact Entegris for best selection.*

*** Flow ranges are scaled to zero flow, measurement is from 10 to 100% of full scale flow range.*

Product specified with a flared tube connection is packaged with two PVDF nuts. For alternative nut materials, or custom configurations and specifications, please contact the factory.

(Note: Specifications are subject to change without notice. Please consult the factory for the most current information.)

FOR MORE INFORMATION

Please call your Regional Customer Service Center today to learn what Entegris can do for you. Visit entegris.com and select the Contact Us link to find the customer service center nearest you.

TERMS AND CONDITIONS OF SALE

All purchases are subject to Entegris' Terms and Conditions of Sale. To view and print this information, visit entegris.com and select the Terms & Conditions link in the footer.

Entegris

Corporate Headquarters
129 Concord Road
Billerica, MA 01821
USA

Customer Service
Tel +1 952 556 4181
Fax +1 952 556 8022
Toll Free 800 394 4083